THIS DRAWING IS UNPUBLISHED. RELEASED FOR PUBLICATION 20
© COPYRIGHT 20 BY TYCO ELECTRONICS CORPORATION. ALL RIGHTS RESERVED.

| LOC | DIST |
|---|---|
| AD | 00 |

REVISIONS

| P | LTR | DESCRIPTION | DATE | DWN | APVD |
|---|---|---|---|---|---|
| | 0 | REV PER 0G3C-0326-01 | 17DEC01 | RB | JM |
| | A | REV PER 0G3C-0367-03 | 27OCT03 | RB | JM |
| | B | 0G3C-0736-04 | 20FEB2006 | RB | DR |

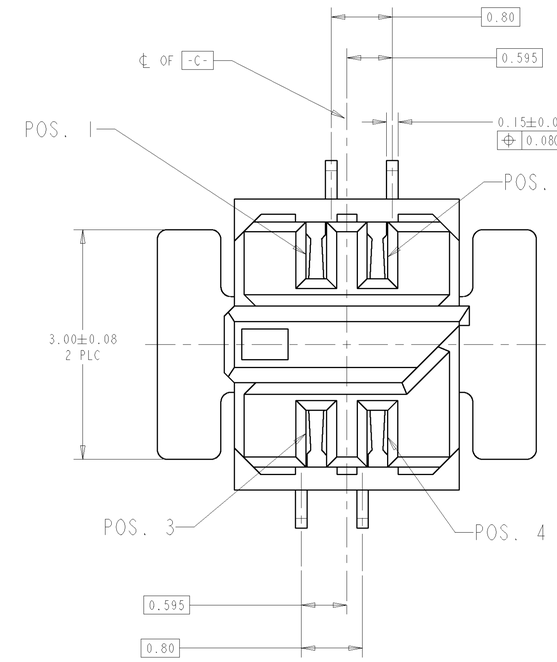


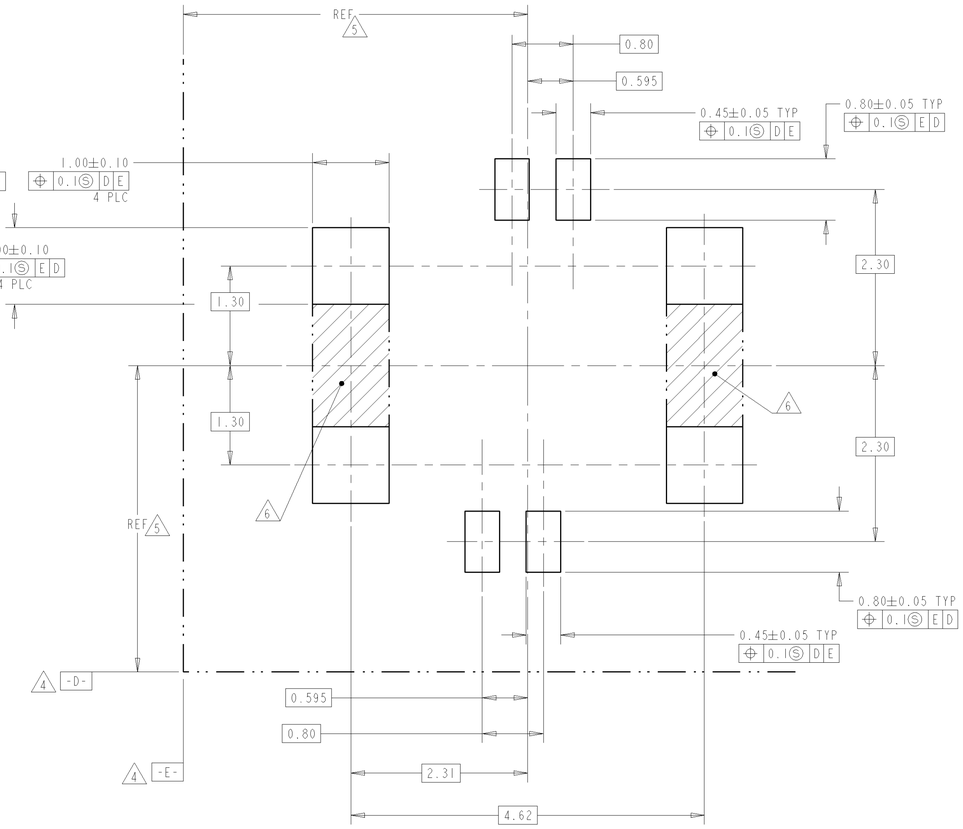


SCALE 25:1

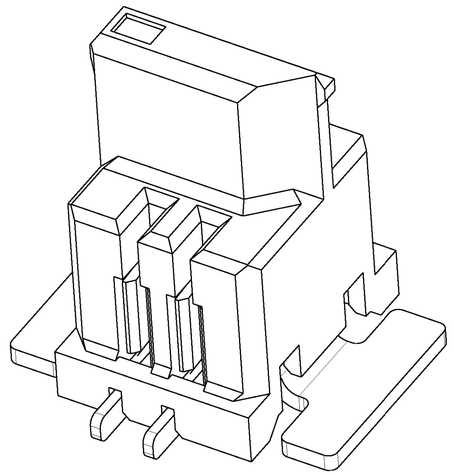

SCALE 25:1

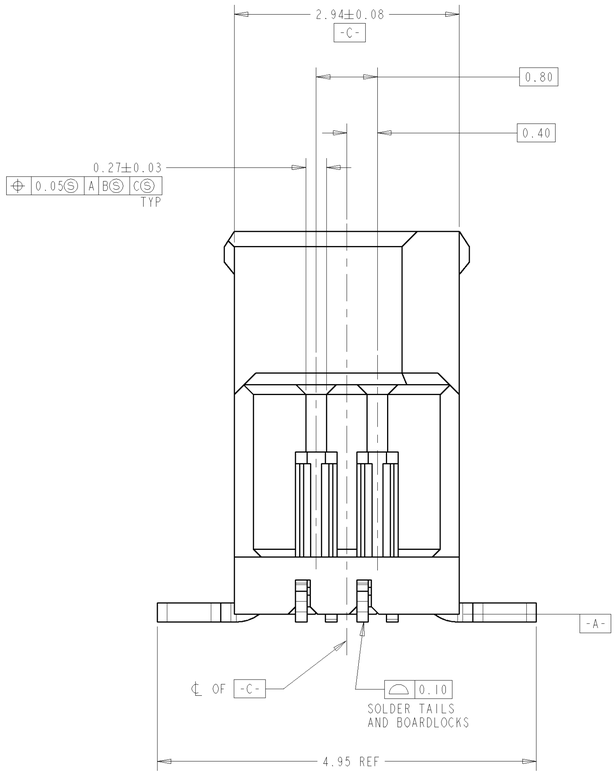


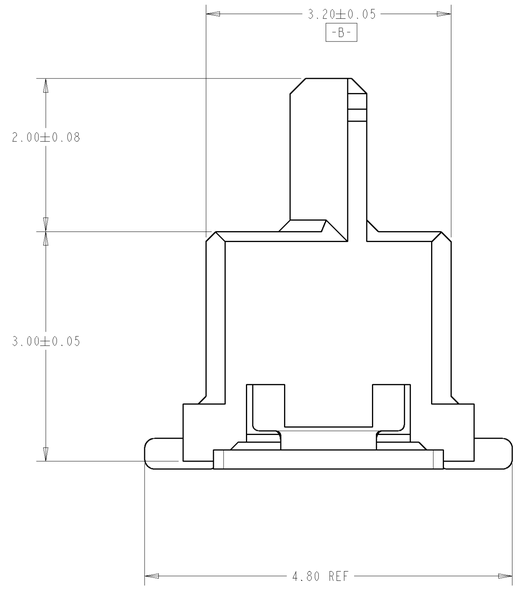


1. HOUSING MATERIAL; UL94 V-0 RATED LCP, COLOR: NATURAL.
   CONTACT MATERIAL; PHOS BRONZE

   BOARDLOCK MATERIAL; BRASS

2. CONTACT PLATING; 0.76 µm MIN GOLD IN MATING AREA
   0.13µm - 0.20µm GOLD IN SOLDER AREA.
   BOTH OVER 1.27µm MIN NICKEL ON ENTIRE STOCK.

3. BOARDLOCK PLATING; 3.8 µm MIN BRIGHT TIN/LEAD ON ENTIRE STOCK
   OVER 1.27 µm MIN NICKEL ON ENTIRE STOCK.

4. DATUMS ESTABLISHED BY CUSTOMER.

5. BASIC DIMENSIONS ESTABLISHED BY CUSTOMER.

6. NO TRACES ON EXTERNAL BOARD LAYER IN THIS AREA.

7. BOARDLOCK PLATING; 3.8 µm MIN TIN ON ENTIRE STOCK
   OVER 1.27 µm MIN NICKEL ON ENTIRE STOCK.

8. ROHS 2002/95/EC COMPLIANT.

| NO OF POS. | PART NUMBER |
|---|---|
| 4 | 5-1445339-1 |
| 4 | 1445339-1 |

THIS DRAWING IS A CONTROLLED DOCUMENT FOR TYCO ELECTRONICS CORPORATION. IT IS SUBJECT TO CHANGE. USE FOR CONTROLLING ENGINEERING ORGANIZATION SHOULD BE CONTACTED FOR THE LATEST REVISION.

DIMENSIONS: mm

TOLERANCES UNLESS OTHERWISE SPECIFIED:
0 PLC ±-
1 PLC ±-
2 PLC ±0.13
3 PLC ±0.013
4 PLC ±-
ANGLES ±1

MATERIAL 1

FINISH SEE TABLE

DWN D. FABIAN 28FEB2001
CHK -
APVD -
PRODUCT SPEC 108-1955
APPLICATION SPEC 114-13051
WEIGHT -

Tyco Electronics
Tyco Electronics
Harrisburg, PA 17105-3608

NAME AMPMODU MICRO INTERCONNECT RECEPTACLE ASSEMBLY 4 POSITION

| SIZE | CAGE CODE | DRAWING NO | RESTRICTED TO |
|---|---|---|---|
| A1 | 00779 | C-1445339 | - |

CUSTOMER DRAWING SCALE 12:1 SHEET 1 OF 1 REV B

AMP 4805 REV 31MAR2000

Pro/ENGINEER DRAWING